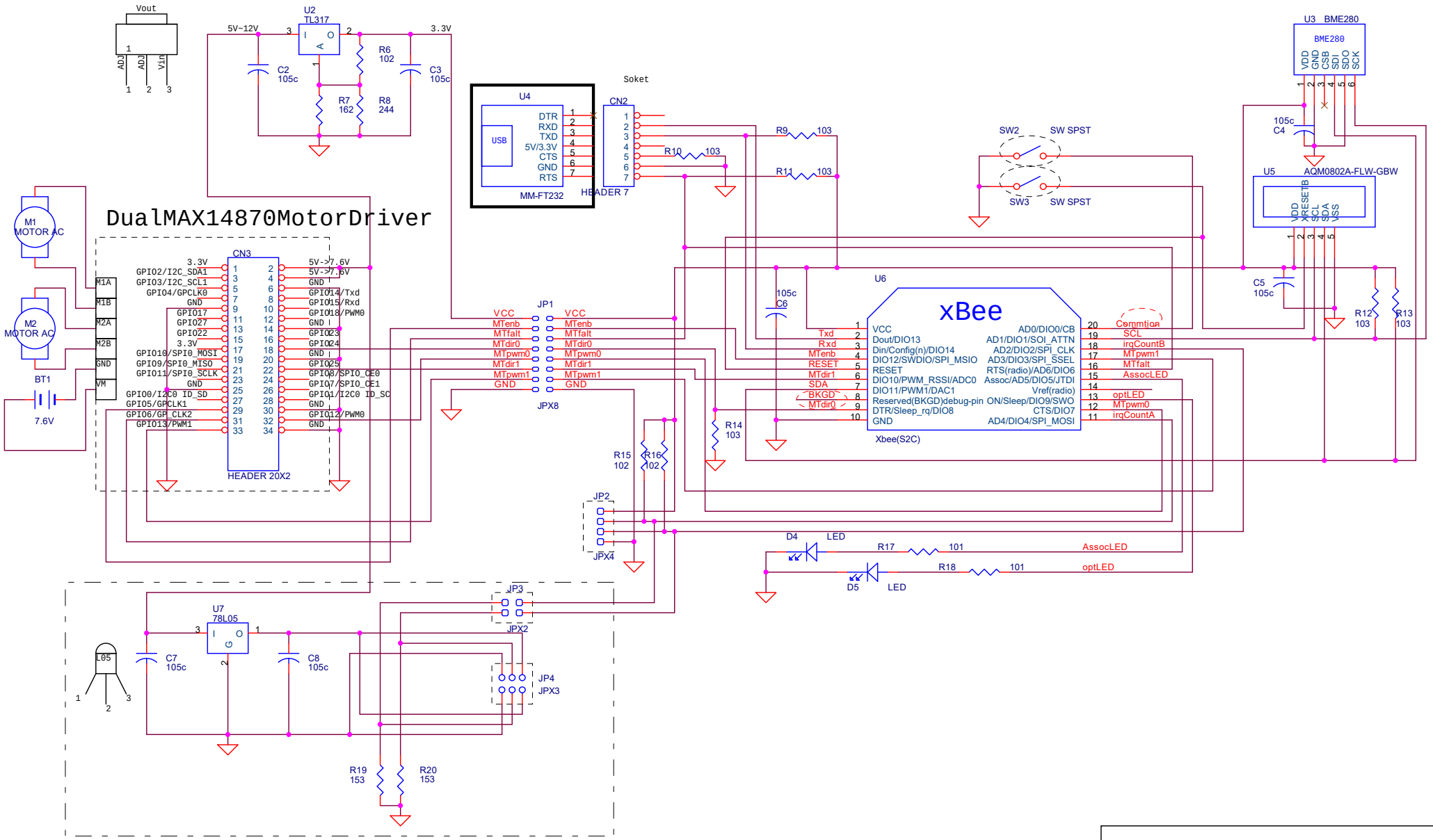


| | |
|---|---|
| Title | <Title> |
| Size B | Document Number <Doc> |
| Rev | <RevCode> |
| Date: Friday, July 05, 2019 | Sheet 3 of 3 |